Technical data

Date	**9/21/2025**
Offer N.	---
Pump Type	**KMS65CE/18,5**

Client	**EES GmbH**	Reference	**---**

Pump data

Pump body	Stainless steel AISI 304 EN X5CrNi18-10
Impeller	Stainless steel AISI 304 EN X5CrNi18-10
Mechanical seal housing	Stainless steel AISI 304 EN X5CrNi18-10
Motor bracket	Cast iron GJL-250
Mechanical seal	Ceramic-Graphite
Pump shaft end	Stainless steel AISI 304 EN X5CrNi18-10
Liquid temperature	-10°C +90°C
Operating pressure	Max 10 bar

Monobloc horizontal centrifugal pumps. Widely used in water supplies, pressurization, cooling, and industrial applications. Their flat curve guarantees small change in pressure drop for large change in flow.

P2		P1 (kW)		A		Q (m3/h - l/min)																
						0	36	39	42	45	48	54	60	66	72	78	84	90	96	108	120	126
(HP)	(kW)	1~	3~	1x230 V	3x400 V	0	600	650	700	750	800	900	1000	1100	1200	1300	1400	1500	1600	1800	2000	2100
						H (m)																
25	18,5	---	18,8	---	31,6	49.7	49	48.7	48.4	48.2	48	47.6	47.3	47.2	47.1	46.9	46.6	46.2	45.9	45	43.5	42.5

Technical Sheet

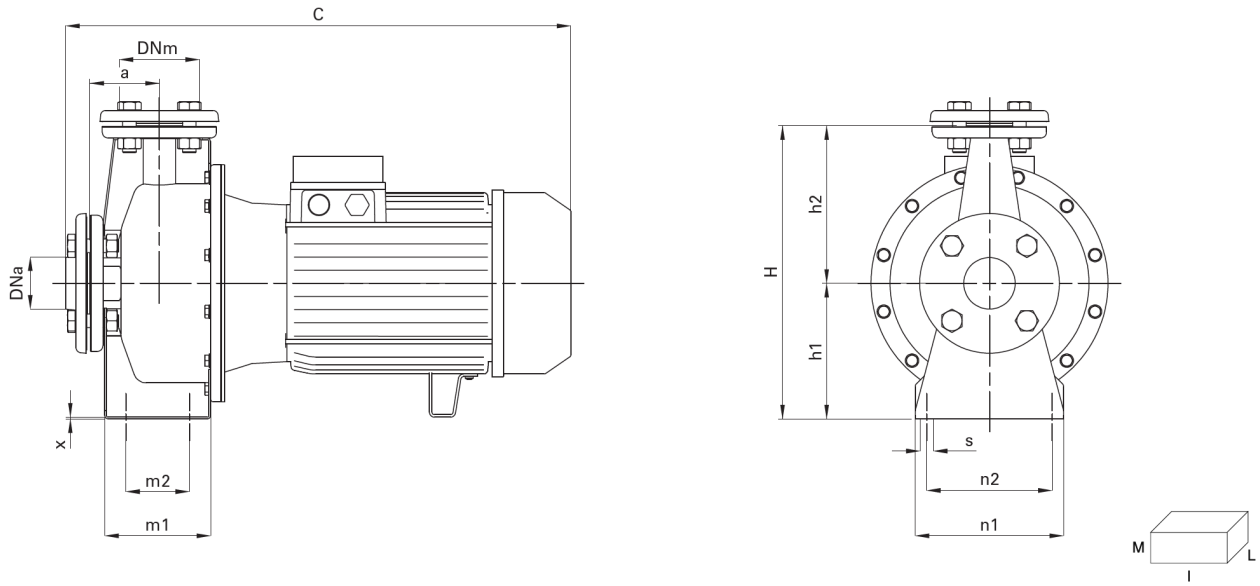

DNA	DNM	DIMENSIONS (mm)														Kg
		a	h1	h2	m1	m2	n1	n2	x	s	C	H	I	L	M	
80	65	100	180	225	140	93	175	148	2	10	770	405	820	360	525	130,5

Notes

The information may be subject to change without notice. It is always advisable to contact our commercial department in order to get further information about the products, their technical specifications and warranty conditions. The Company is expressly relieved of any liability for the purchasing of a product not in line with the customer's needs, if not consulted beforehand for a specific consultancy.

Working Curves		Curv n°:	KMS65CE/18,5
Pump type:	KMS65CE/18,5	Date:	9/21/2025

Q (l/min) 1400 | H (m) 40.6 | Power [kW] 13.34 | Efficiency % 79.62 | NPSH (m) 2.84

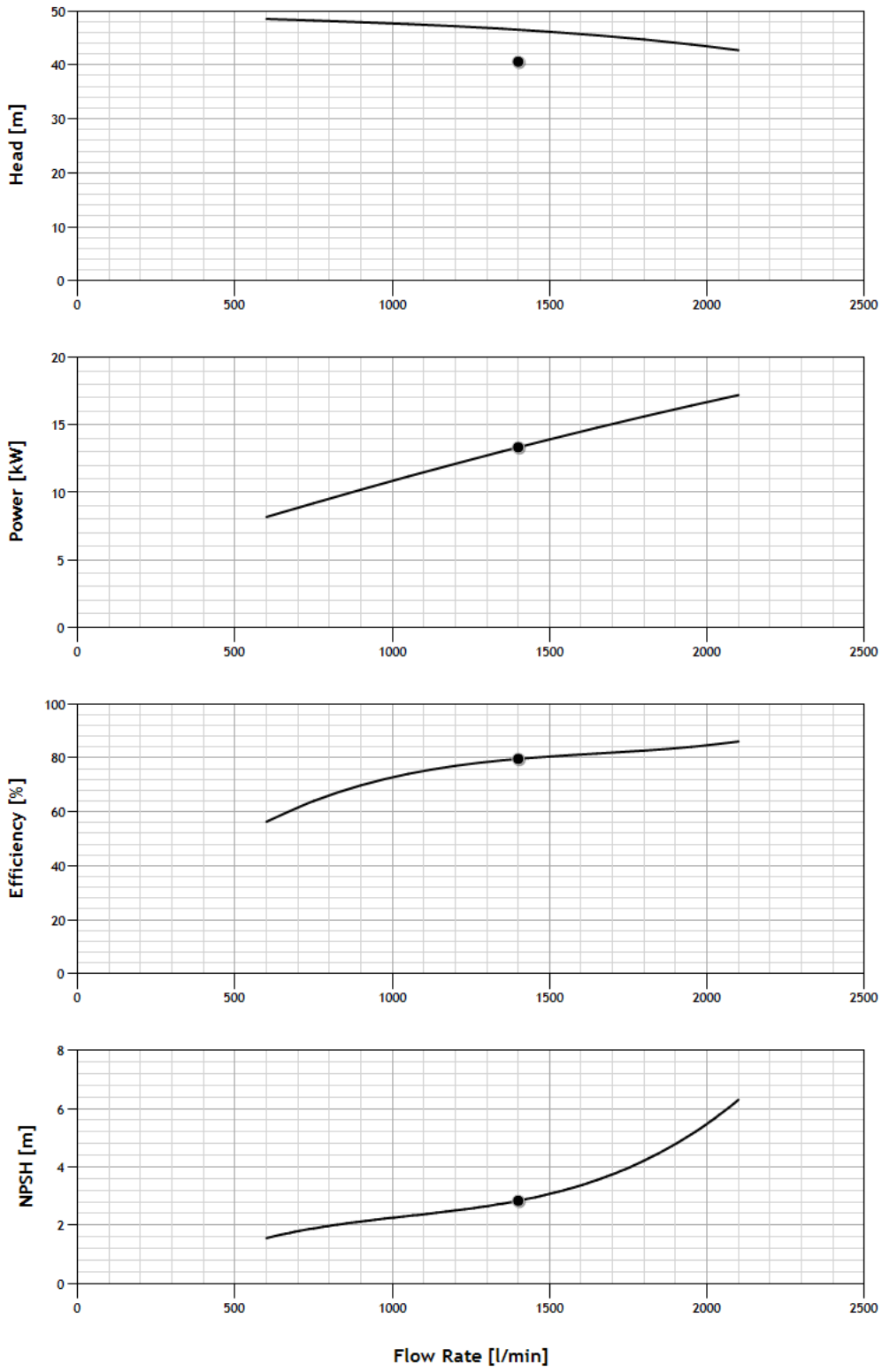

MEI ≥ 0,4 (regulation EU N. 547/2012)
Tolerances according to UNI ISO 9906 grade 3B

KMS Serie-Mechanical seal and bearings

MECHANICAL SEAL	PUMP MODEL	SHAFT Ø		STANDARD MATERIAL	OPTIONAL			
					E	V	2E	2V
	KMS32BE/1,5, KMS32BE/2,2, KMS32CE/3, KMS40BE/1,5, KMS40BE/2,2, KMS40BE/3, KMS50AE/3	20mm	***Rotating face*** ***Stationary face*** ***Elastomer***	Ceramic Graphite NBR	Ceramic Graphite EPDM	- - -	SiC SiC EPDM	SiC SiC FKM
	KMS32CE/4, KMS32CE/5,5, KMS40BE/4, KMS40CE/5,5, KMS40CE/7,5, KMS40CE/11, KMS50AE/4, KMS50BE/5,5, KMS50CE/7,5, KMS50CE/11, KMS50CE1/15- KMS50CE/15, KMS50CE/18,5, KMS65AE/5,5, KMS65AE/7,5, KMS65BE/11, KMS65BE1/15, KMS65BE/15, KMS65CE/18,5, KMS65CE/22, KMS80BE/11, KMS80BE1/15, KMS80BE/15, KMS80BE/18,5, KMS80CE/22	28mm	***Rotating face*** ***Stationary face*** ***Elastomer***	Ceramic Graphite NBR	Ceramic Graphite EPDM	Ceramic Graphite FKM	SiC SiC EPDM	SiC SiC FKM

BEARINGS	PUMP MODEL	TYPE	
	3-KMS32CE/4, 3-KMS40BE/4, 3-KMS50AE/4	6204-ZZ	6206-ZZ C3
	KMS32BE/1,5, KMS32BE/2,2, KMS32CE/3, KMS40BE/1,5, KMS40BE/2,2, KMS40BE/3, KMS50AE/3	6205-ZZ C3	6203-ZZ
	1-KMS32CE/4, KMS32CE/5,5, 1-KMS40BE/4, KMS40CE/5,5, KMS40CE/7,5, 1-KMS50AE/4, KMS50BE/5,5, KMS50CE/7,5, KMS65AE/5,5, KMS65AE/7,5	6206-ZZ C3	6306-ZZ C3
	KMS40CE/11, KMS50CE/11, KMS65BE/11, KMS80BE/11	6206-ZZ C3	6308-ZZ C3
	KMS65BE1/15, KMS50CE1/15, KMS80BE1/15	6308-ZZ C3	6306-ZZ C3
	KMS50CE/15, KMS50CE/18,5, KMS65BE/15, KMS65CE/18,5, KMS65CE/22, KMS80BE/15, KMS80BE/18,5, KMS80CE/22	6308-ZZ C3	6309-ZZ C3